

LCDMXSD-T15-B

DMX Wall Controller RGB+TW 4 Zone 230VAC IP20

PRODUCT OVERVIEW

Designed for flexible lighting control, T15 glass touch panel supports DMX or RF control with a 4-zone remote function for RGB + TW (tuneable white) systems. Featuring smooth touch dimming, and wireless expansion via 2.4G RF controllers, it delivers precision control in a modern design.

PRODUCT INFORMATION

CODE
LCDMXSD-T15-B

CHANNELS
20

DIMMING RANGE
Dependent on driver(s)

ZONES
4

SAFETY
AS/NZS61347 EN55015

IP RATING
20

DIMENSIONS
L120mm x W80mm x H37mm

VOLTAGE INPUT
100-240V

DIMMING OUTPUT
DMX, RF

REMOTE ENABLED
Yes

STANDBY LOAD
0.5W

PROTECTION
EN 62368-1:2020+A11:2020

OPERATING TEMP
-30°C to 55°C

DIMENSIONS

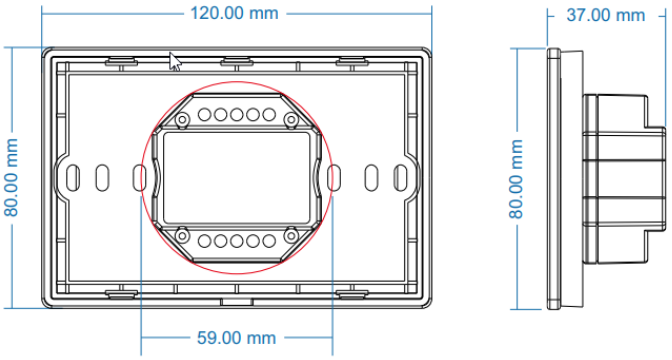

While every effort has been made to ensure accuracy, product specifications may vary. Task Lighting reserves the right to update or modify product details without notice.