

LCRGBSD-T3-W

Wall Controller RGB 3Ax4Chan 12-24V White

PRODUCT OVERVIEW

The T3 RGB touch wall panel delivers smooth, intuitive control for constant voltage lighting systems. Featuring an ultra sensitive, high strength glass touch interface with soft backlighting, it offers precise brightness and colour control at the touch of a finger. Compatible with RF 2.4G single-zone control, it provides flexible wired or wireless operation for modern lighting installations. Designed for premium interiors, it combines elegant styling with effortless performance.

PRODUCT INFORMATION

CODE LCRGBSD-T3-W	**VOLTAGE INPUT** 12-24V DC
VOLTAGE OUTPUT 12-24V DC	**OUTPUT POWER** 288W
OUTPUT CURRENT (PER CH) 3A/ch	**CHANNELS** 3
DIMMING OUTPUT PWM	**DIMMING RANGE** 0-100%
REMOTE ENABLED Yes	**STANDBY LOAD** 0.5W
SAFETY AS/NZS61347 EN55015	**IP RATING** 20
OPERATING TEMP -30°C to 55°C	**DIMENSIONS** L86mm x W86mm x H33mm

DIMENSIONS

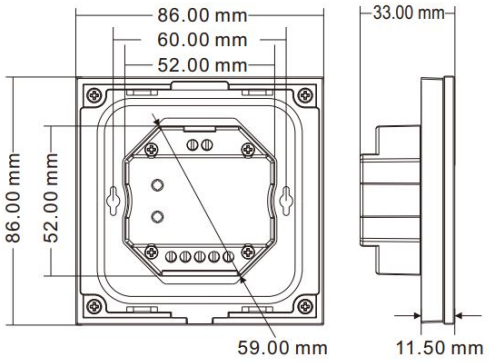

While every effort has been made to ensure accuracy, product specifications may vary. Task Lighting reserves the right to update or modify product details without notice.