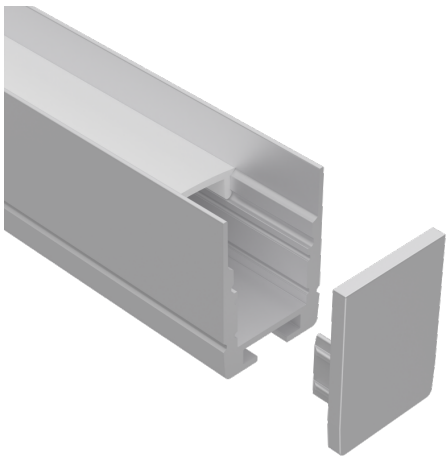

LEDCHAN520OL

Deep Surface Mounted 17.6mm x 25mm Aluminium Profile

PRODUCT OVERVIEW

LEDCHAN520 is a versatile aluminium profile designed for both surface and suspended mounting, offering a clean, continuous line of light when paired with the appropriate LED strips. Its opal diffuser provides uniform illumination while maintaining a sleek architectural appearance. LEDCHAN520 integrates seamlessly into modern interior environments, making it ideal for offices, meeting rooms, hotels, schools, and showroom applications.

PRODUCT INFORMATION

PROFILE CODE
LEDCHAN520OL

FINISH
SILVER

DIFFUSER
OPAL

DIFFUSER MATERIAL
Acrylic

ALUMINIUM GRADE
6063-T5

MOUNTING TYPE
Surface, Suspended Mount

STOCKED LENGTH
4000mm or cut to size

DIMENSION DRAWING (MM)

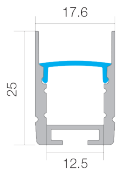

ACCESSORIES

END CAP WITHOUT CABLE HOLE
Code: LEDCHAN520EC1

END CAP WITH CABLE HOLE
Code: LEDCHAN520EC2

MOUNTING CLIPS + SCREWS
Code: LEDCHANMC1

While every effort has been made to ensure accuracy, product specifications may vary. Task Lighting reserves the right to update or modify product details without notice.