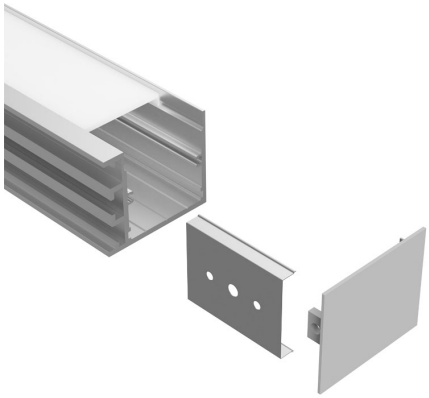

LEDCHAN680OL

Deep Wall Mounted 42mm x 35mm Aluminium Profile

PRODUCT OVERVIEW

LEDCHAN680 is a wall mounted aluminium profile designed for up or down lighting applications using either low or high powered LED strips. Its clean linear form makes it ideal for creating ambient or feature lighting in both residential and commercial interiors. Suitable for a wide range of output requirements, LEDCHAN680 provides a versatile architectural lighting solution for corridors, feature walls, and general wall wash applications.

PRODUCT INFORMATION

PROFILE CODE
LEDCHAN680OL

FINISH
SILVER

DIFFUSER
OPAL

DIFFUSER MATERIAL
Acrylic

ALUMINIUM GRADE
6063-T5

MOUNTING TYPE
Surface Mount

STOCKED LENGTH
4000mm or cut to size

DIMENSION DRAWING (MM)

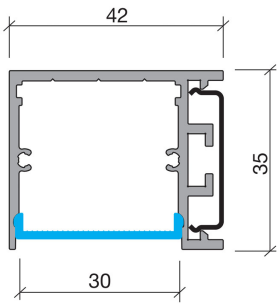

ACCESSORIES

MOUNTING CLIPS + SCREWS
Code: LEDCHANMC2

While every effort has been made to ensure accuracy, product specifications may vary. Task Lighting reserves the right to update or modify product details without notice.