LCDM-MAN-20A-24V
Manual LED Dimmer

Features

- Digital numeric display with visible dimming level
- From 0-100% smooth dimming without flickering
- High load current up to 20A
- Logarithmic or linear dimming curve selectable
- PWM frequency 250Hz, 500Hz, 2kHz or 8kHz selectable

Technical Parameter

Input and Output	
Input voltage	12-24VDC
Input current	20A
Output voltage	12-24VDC
Output current	1CH,20A Max.
Output power	240W/480W Max. @ (12V/24V) 250Hz PWM
Output type	Constant voltage

Safety and EMC	
EMC standard (EMC)	EN301 489,EN 62479
Safety standard(LVD)	EN60950

Dimming data	
Dimming level	100 levels
Dimming range	0-100%
Dimming curve	Logarithmic or linear
PWM Frequency	250Hz, 500Hz, 2kHz, 8kHz

Environment	
Operation temperature	Ta: -30°C ~ +55°C
Case temperature (Max.)	Tc: +85°C
IP rating	IP20

Warranty and Protection	
Warranty	5 years

Mechanical Structures and Installations

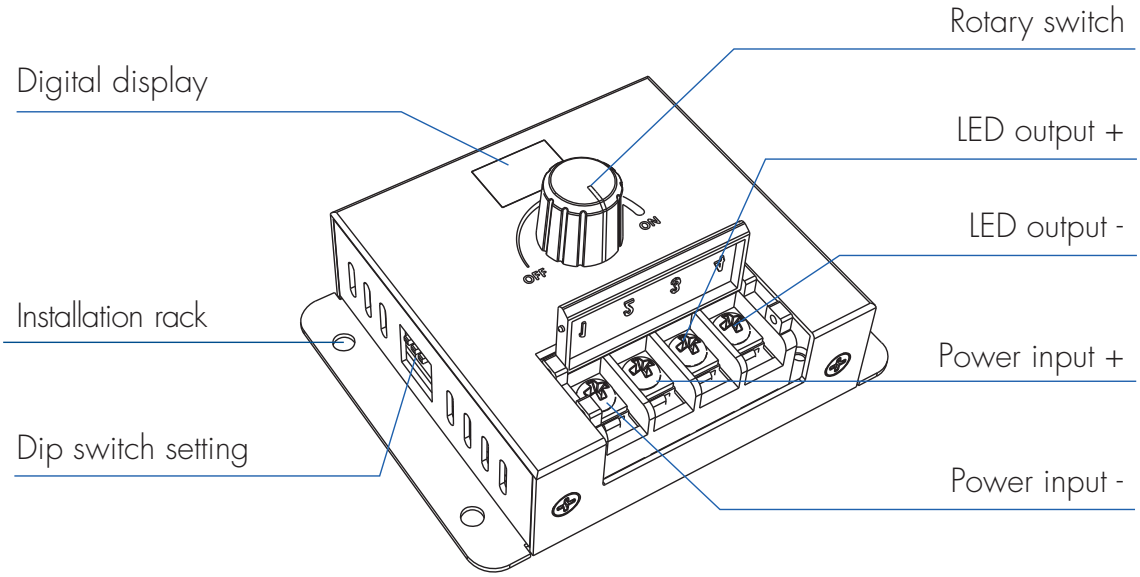

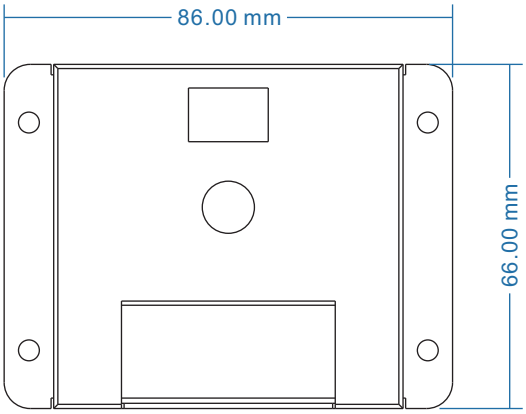

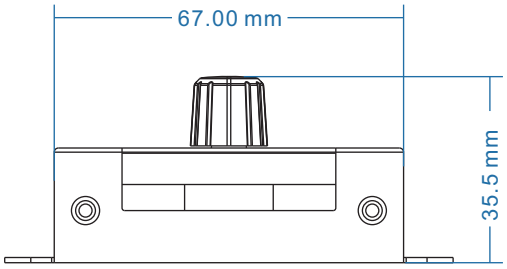

Wiring Diagram

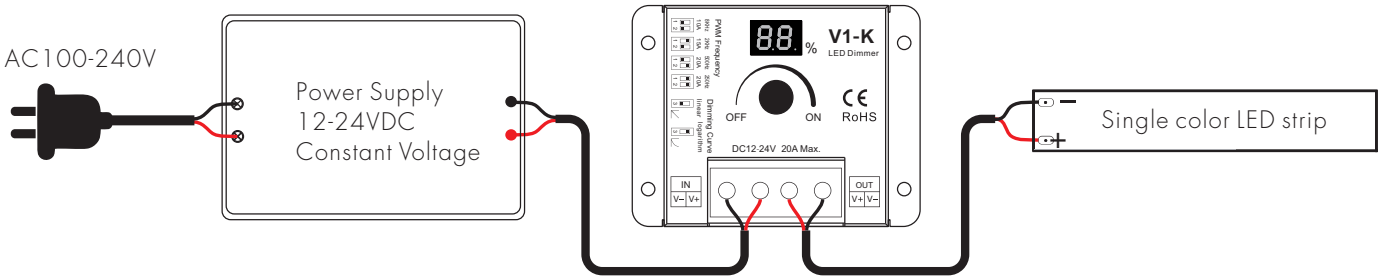

PWM Frequency Setting

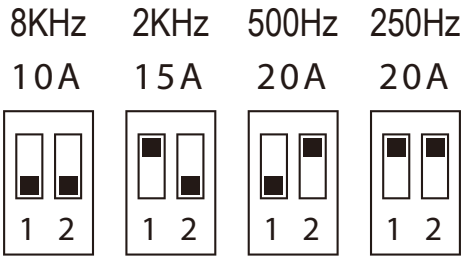

We can select four PWM frequency: 250Hz, 500Hz, 2kHz or 8kHz. Higher PWM frequency, will cause lower output current, higher power noise, but more suitable for camera (No flickers for video).

Dimming Curve Setting

Linear dimming curve

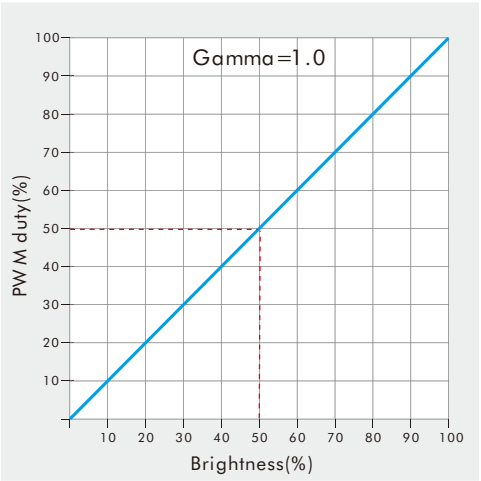

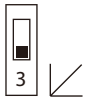

Logarithmic dimming curve

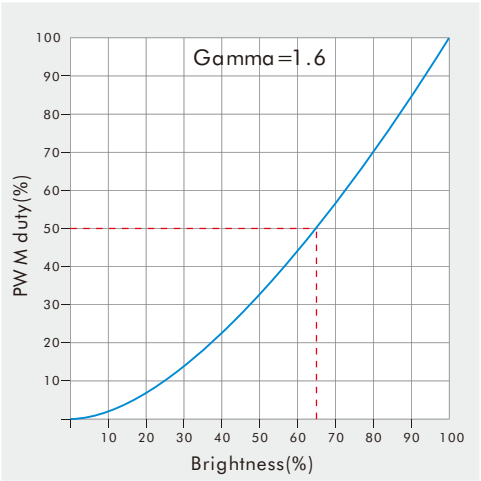

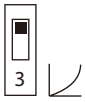

Malfunctions Analysis & Troubleshooting

Malfunctions	Causes	Troubleshooting
No light	1. No power 2. Wrong connectipn or insecure	1. Check the power 2. Check the connection
Uneven intensity between front and rear,with voltage drop	1. Output cable is too long 2. Wire diameter is too small 3. Overload beyond power supply capability 4. Overload beyond controller capability	1. Reduce cable or loop supply 2. Change wider wire 3. Replace higher power supply 4. Add power repeater

While every effort has been made to ensure the accuracy of all information provided Task Lighting can not be held responsible for any errors. Task Lighting also reserves the right to modify/delete product details without notice.